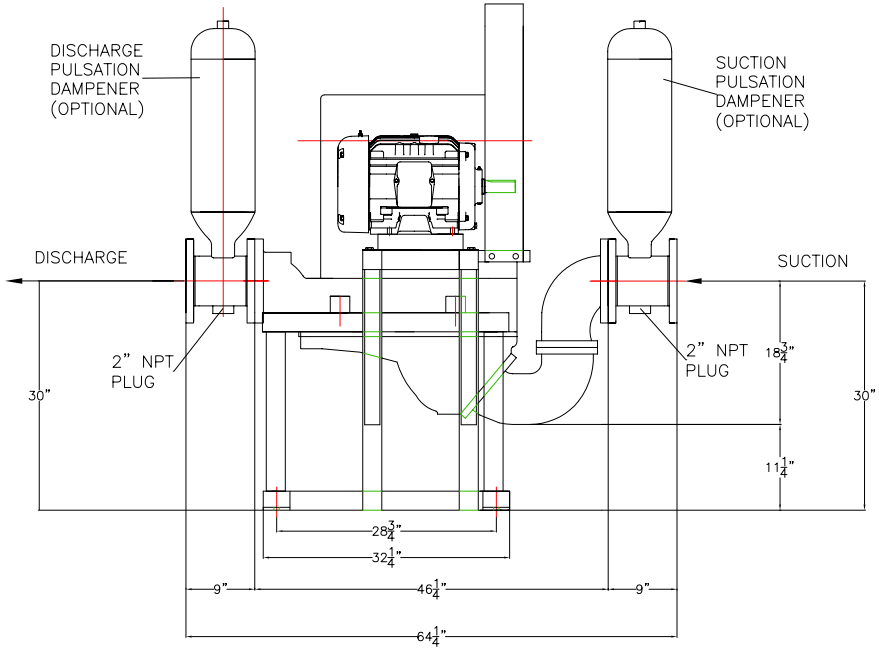

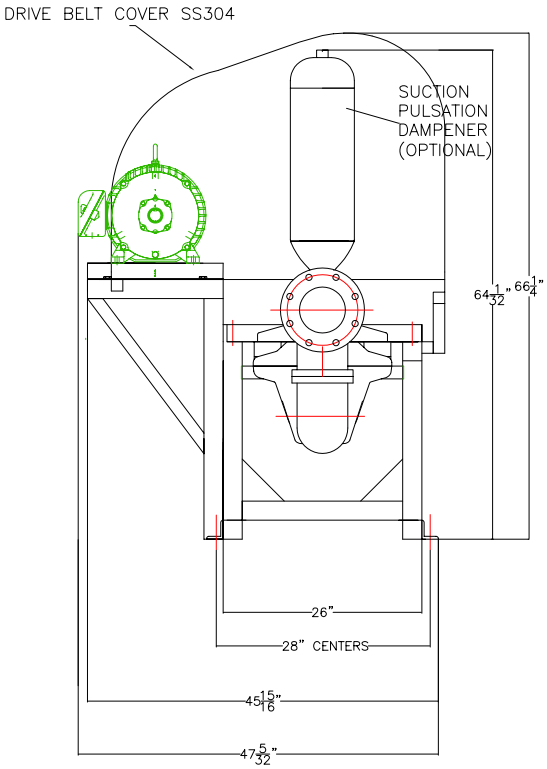

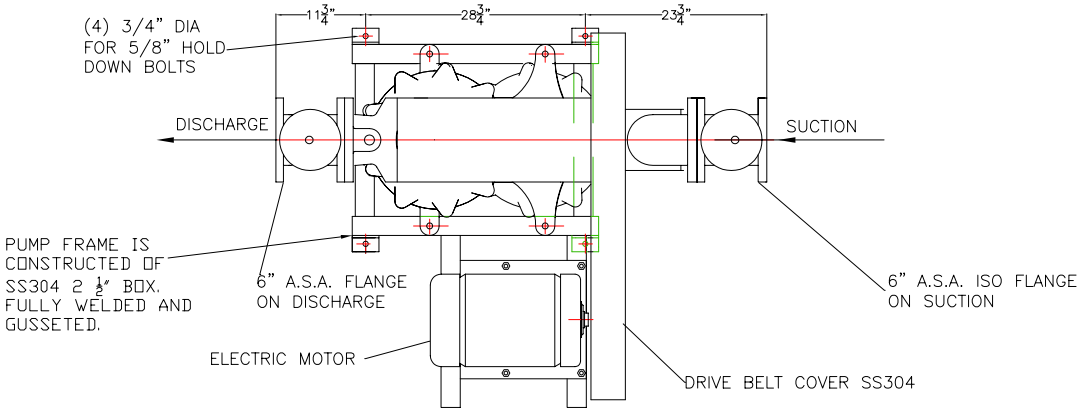

TOLERANCES	
FRACT.	± 0.25
DEC.	± 0.25
ANG.	± 5°

REV	DESCRIPTION	DATE	BY
	REVISION HISTORY		

THIS DRAWING AND ALL INFORMATION IS THE PROPERTY OF

PENN VALLEY PUMP CO., INC.
998 EASTON ROAD – WARRINGTON, PA 18976
PHONE: (215) 343-8750 FAX: (215) 343-8753

ALL INFORMATION CONTAINED IN THIS DOCUMENT IS BOTH CONFIDENTIAL AND PROPRIETARY TO PVP. NO LICENSE, EXPRESSED OR IMPLIED, UNDER ANY PATENT, COPYRIGHT, OR TRADE SECRET IS GRANTED OR IMPLIED BY THE CONVEYANCE OF THIS DOCUMENT. NO PART OF THIS DOCUMENT MAY BE REPRODUCED, TRANSMITTED, TRANSCRIBED, STORED IN A RETRIEVAL SYSTEM, TRANSLATED TO ANY LANGUAGE OR COMPUTER LANGUAGE, IN ANY FORM BY ANY MEANS ELECTRONIC, MECHANICAL, OR OTHERWISE.

CUSTOMER:
LOCATION:

PROJECT: 6" DOUBLE DISC SIDE MOUNT UNIT WITH 6" PULSATION DAMPENERS

SCALE	1/24"=1"
DATE	12/09/05
DR. BY	T LAWSON
PLOT DATE	
DRAWING NO.	PVD 724
SHEET	1 OF 1
REV.	B